UN492S_OUTLINE

The center of gravity: it is within 10mm from active center.

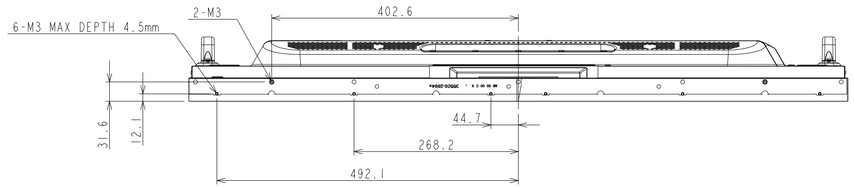

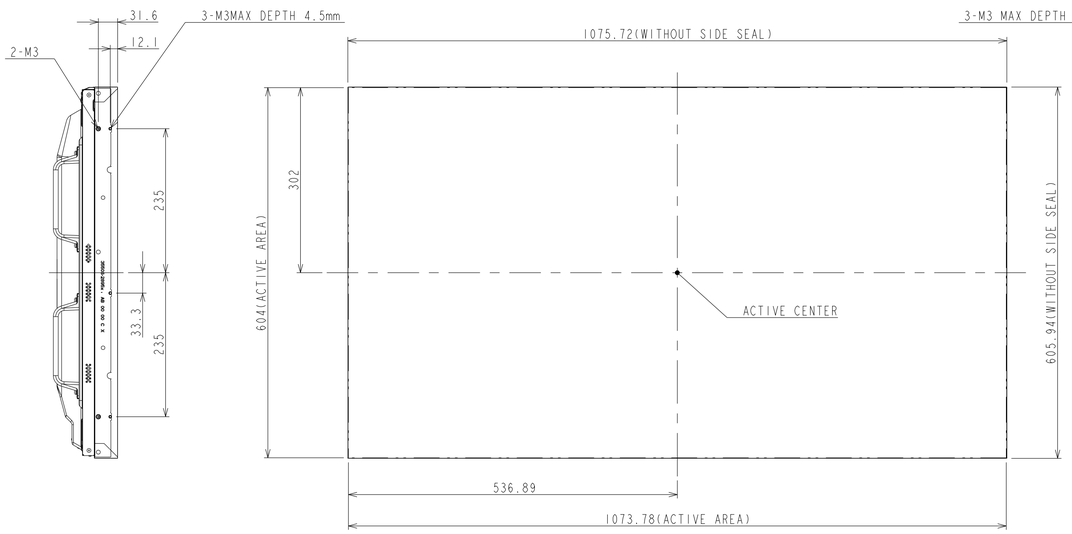

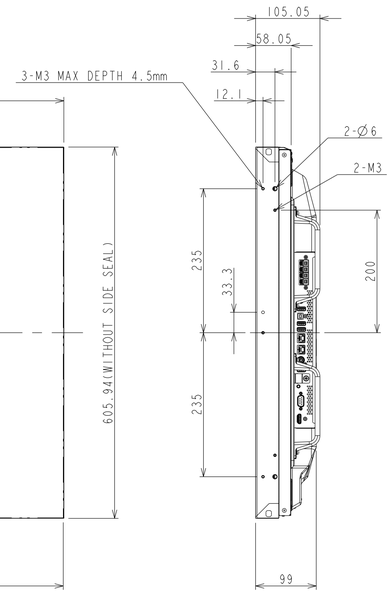

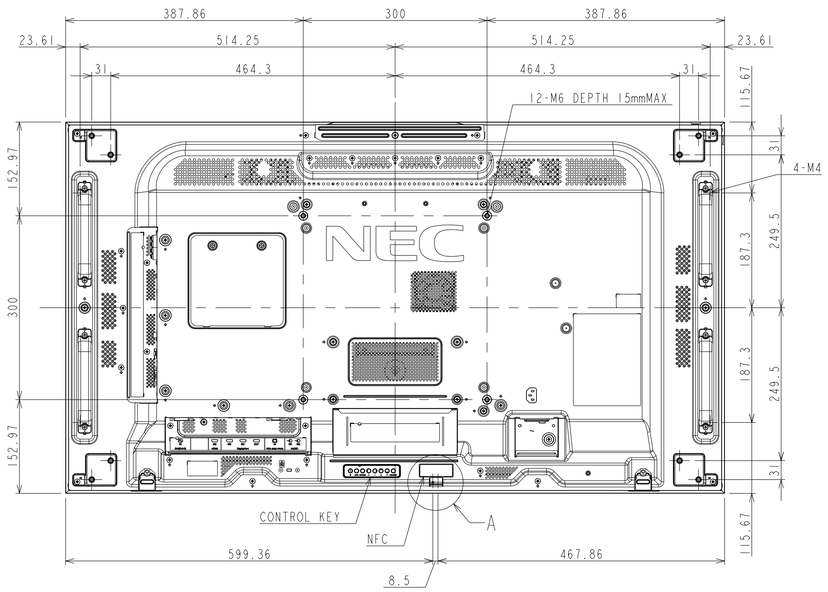

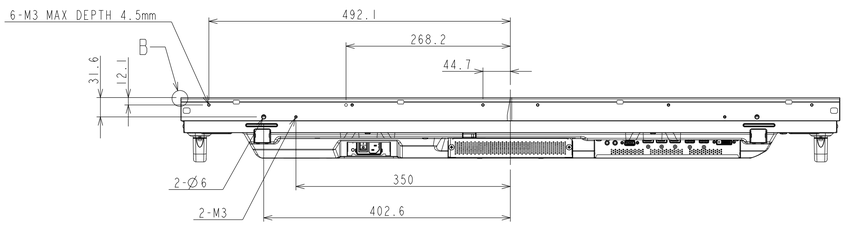

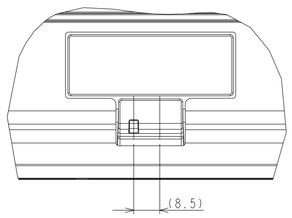

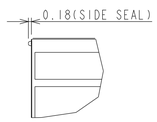

DETAIL B
SCALE: NTS

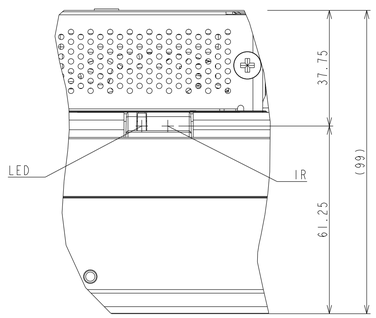

DETAIL A
SCALE(1/1)

UNIT	mm
SCALE	1/5
MODEL	UN492S
NEC Display Solutions 2018/07/27	